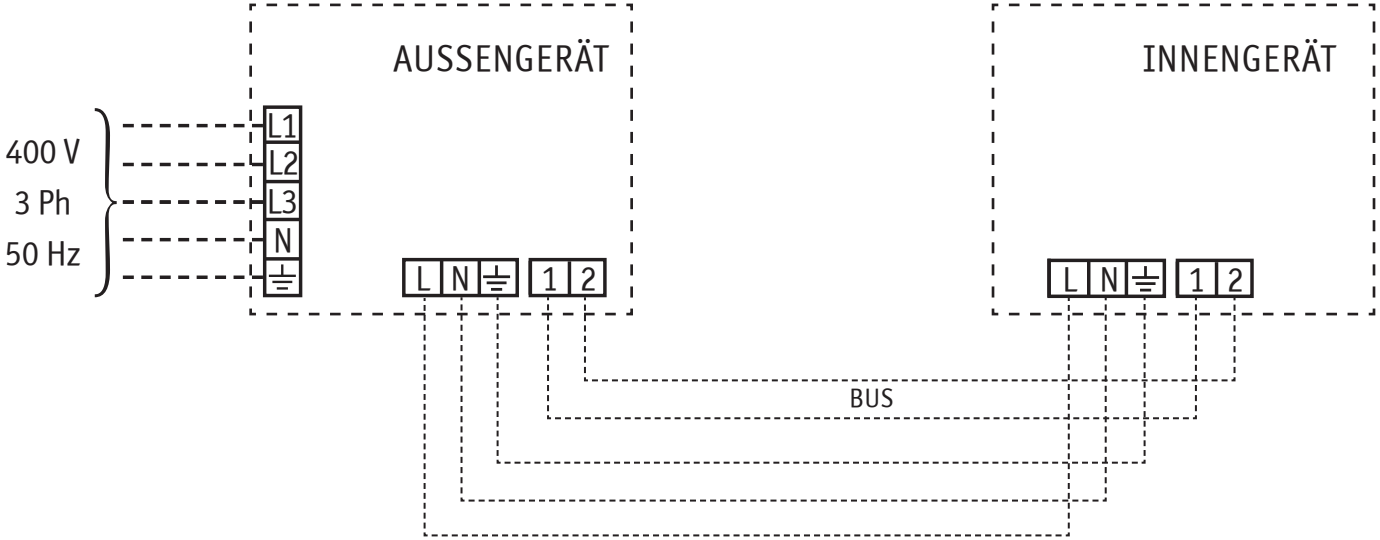

KRONE Kälte+Klima Vertriebs-GmbH		
	bearbeitet:	geändert:
Name:	H.H.	
Datum:	19.08.2020	
Uhrzeit:		
	GUD-PHS Kanalgeräte Elektrische Anschlüsse	

Indoor Unit

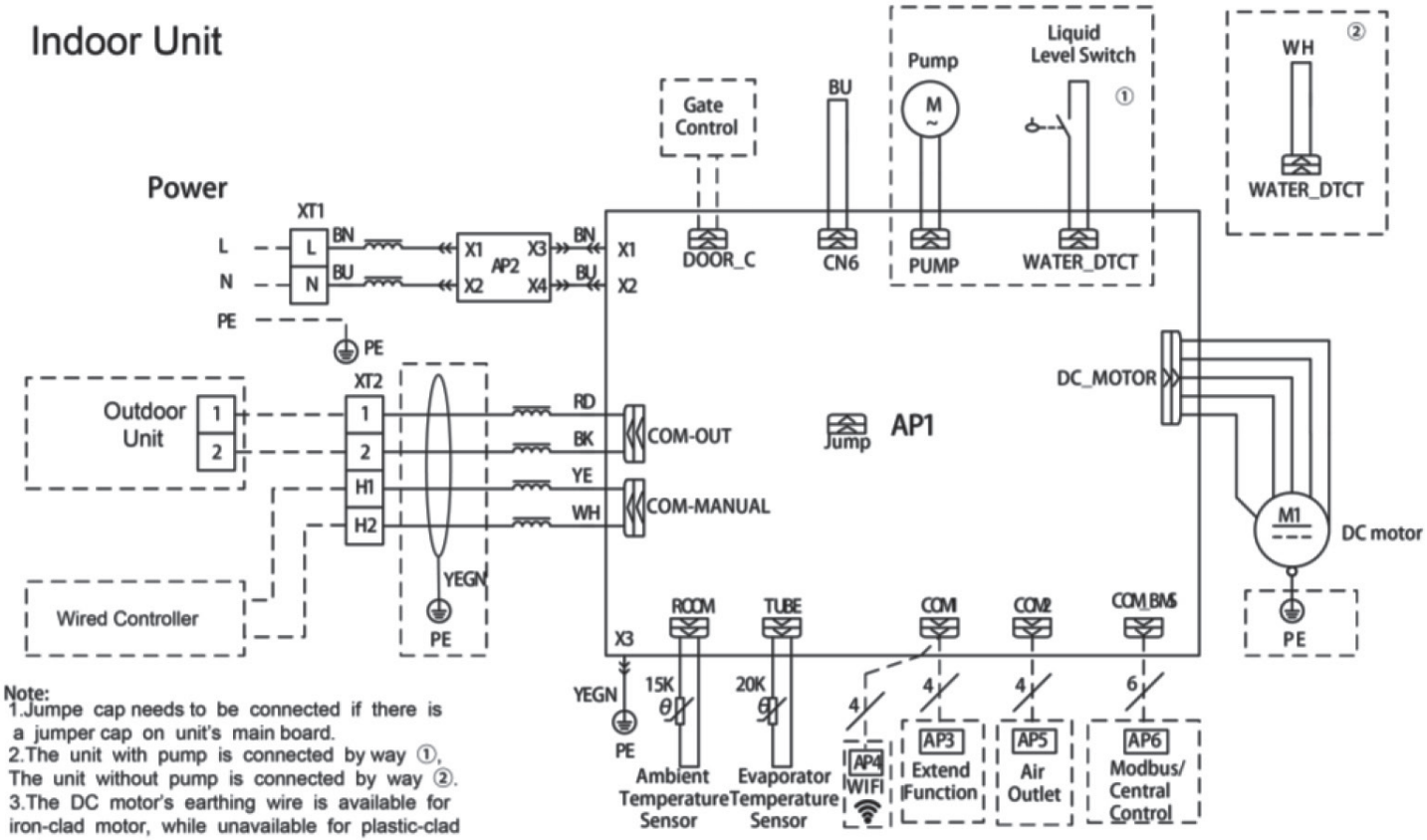

Note:
1.Jumpe cap needs to be connected if there is a jumper cap on unit's main board.
2.The unit with pump is connected by way ①, The unit without pump is connected by way ②.
3.The DC motor's earthing wire is available for iron-clad motor, while unavailable for plastic-clad motor.
4.The Modbus/Central control is optional accessory.
5.AP3 is optional accessory, Including functions of cold plasma generator and fresh air fan.
6.Air Outlet is optional accessory.
7.Some of the units have earth wire of the communication cord

KRONE Kälte+Klima Vertriebs-GmbH		
	bearbeitet:	geändert:
Name:	H.H.	
Datum:	19.08.2020	
Uhrzeit:		
	GUD-140-PHS Kanalgerät	